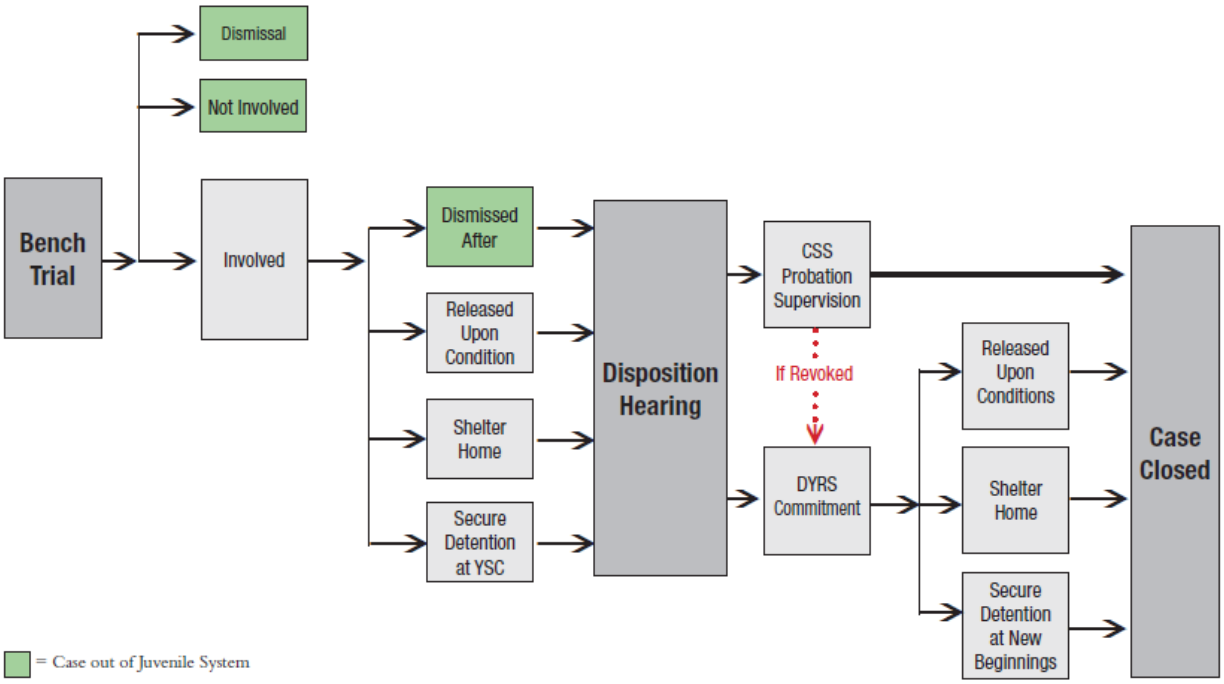Post-Adjudication Process